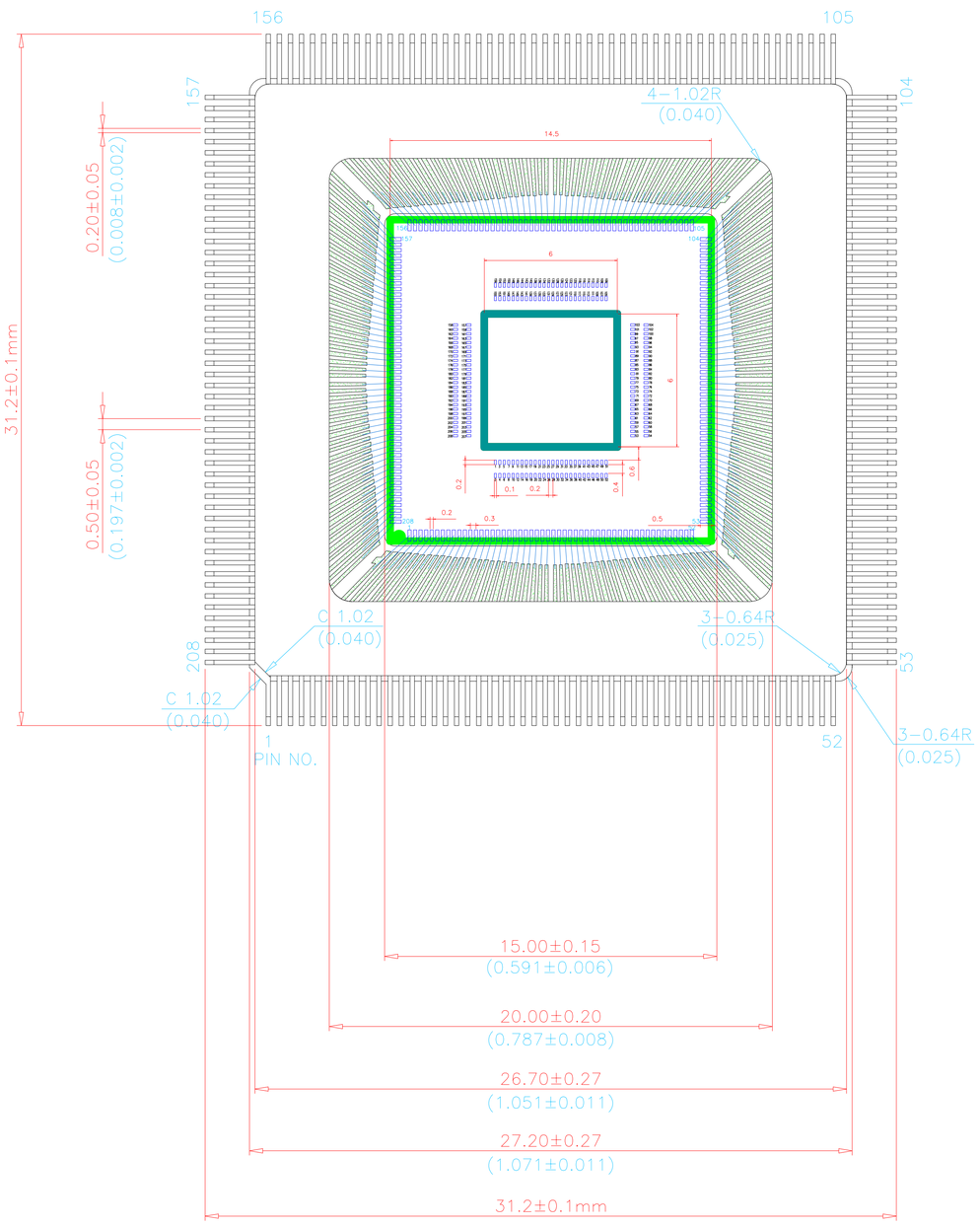

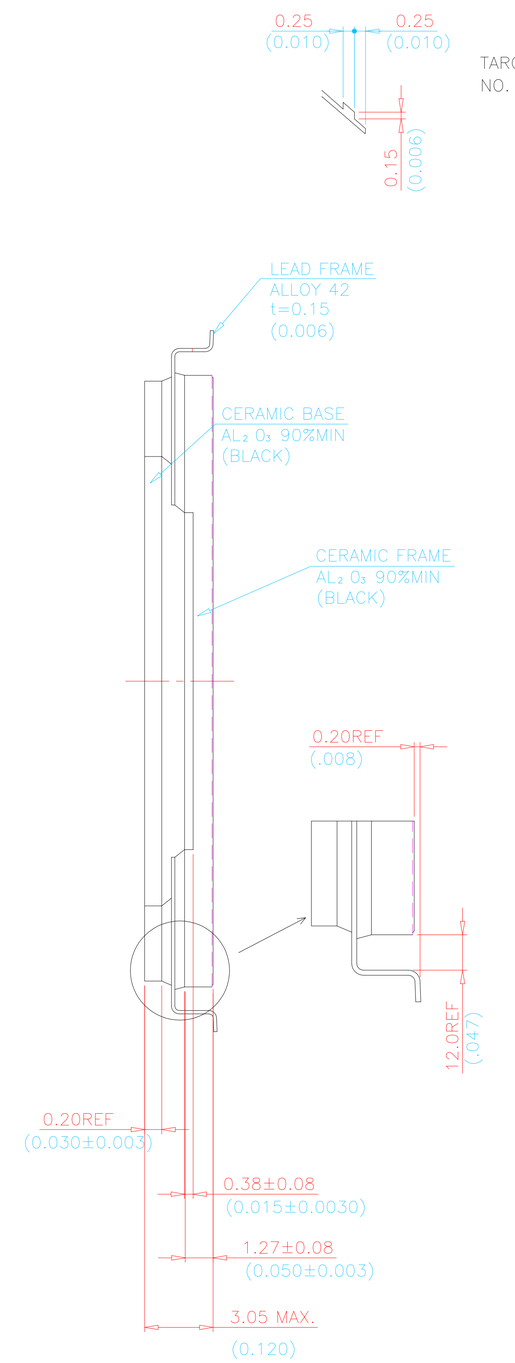

TARGET MARK
NO. 1,53,105,157PIN

NO	ANGLE	NO	ANGLE
1	0.3001°	27	15.6793°
2	0.8990°	28	16.2544°
3	1.4991°	29	16.8289°
4	2.0977°	30	17.4005°
5	2.6973°	31	17.9715°
6	3.2953°	32	18.5394°
7	3.8941°	33	19.1066°
8	4.4913°	34	19.6706°
9	5.0892°	35	20.2338°
10	5.6852°	36	20.7938°
11	6.2819°	37	21.3528°
12	6.8765°	38	21.9086°
13	7.4717°	39	22.4633°
14	8.0648°	40	23.0146°
15	8.6582°	41	23.5648°
16	9.2494°	42	24.1115°
17	9.8408°	43	24.6570°
18	10.4299°	44	25.1990°
19	11.0191°	45	25.7397°
20	11.6058°	46	26.2768°
21	12.1925°	47	26.8125°
22	12.7767°	48	27.3446°
23	13.3607°	49	2708752°
24	13.9420°	50	28.4021°
25	14.5231°	51	28.9274°
26	15.1014°	52	29.4490°

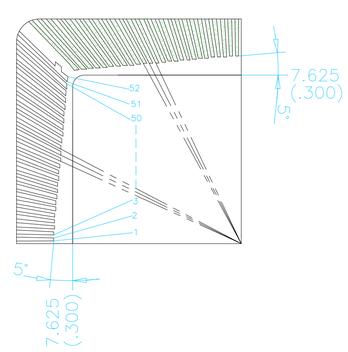

宜特科技股份有限公司
Integrated Service Technology Inc.

TITLE
CQFP-208(QC-208350-WZ)

CENERAL TOLERANCE

CERTIFIED FOR CONSTRUCTION
BY
DATE

	DWG.	DESIGN	CHK.	APPR.
BY				
DATE				

單位:MM
單位:INCH

PROJ. NO.
LCYCIC:
KPEC:

DWG. NO.
CCQ-208-S3

REV.

FILE NAME:
SCALE:
SHEET